VARIERA

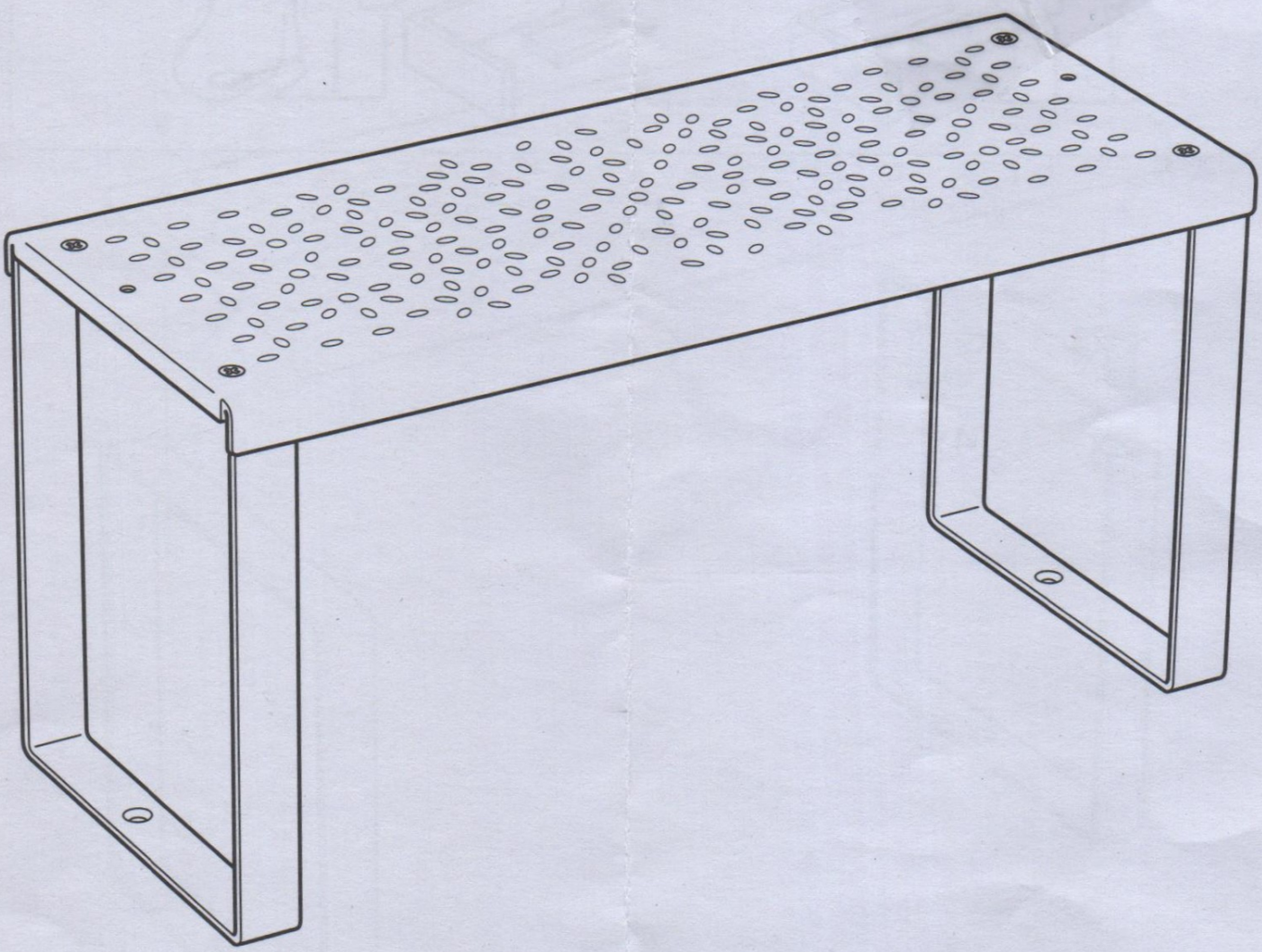

IKEA®

Design and Quality
IKEA of Sweden

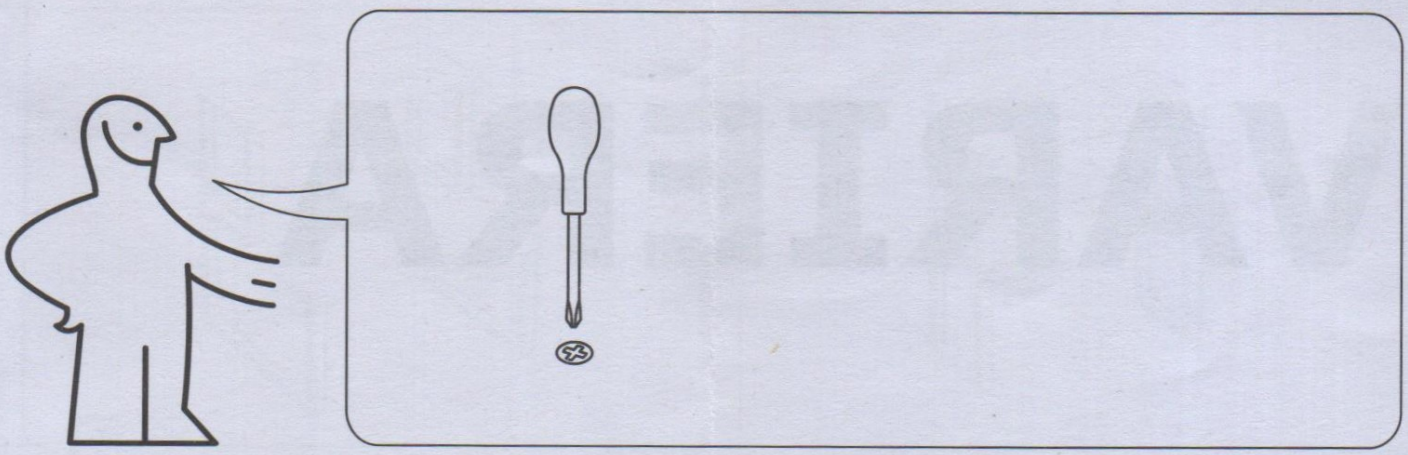

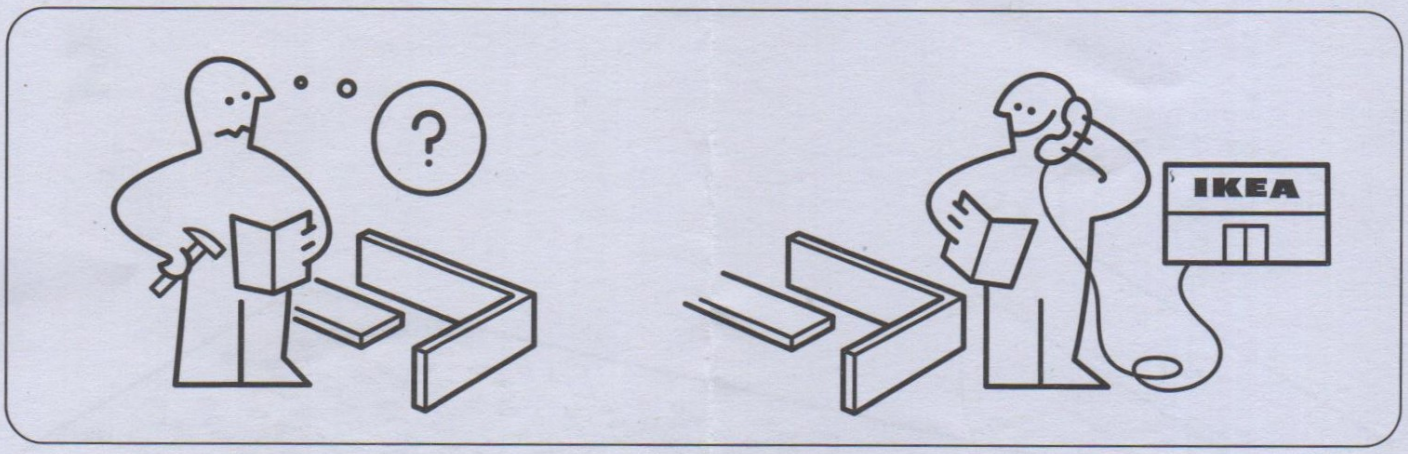

2x

4x

1

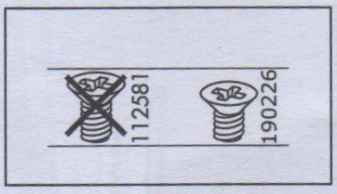

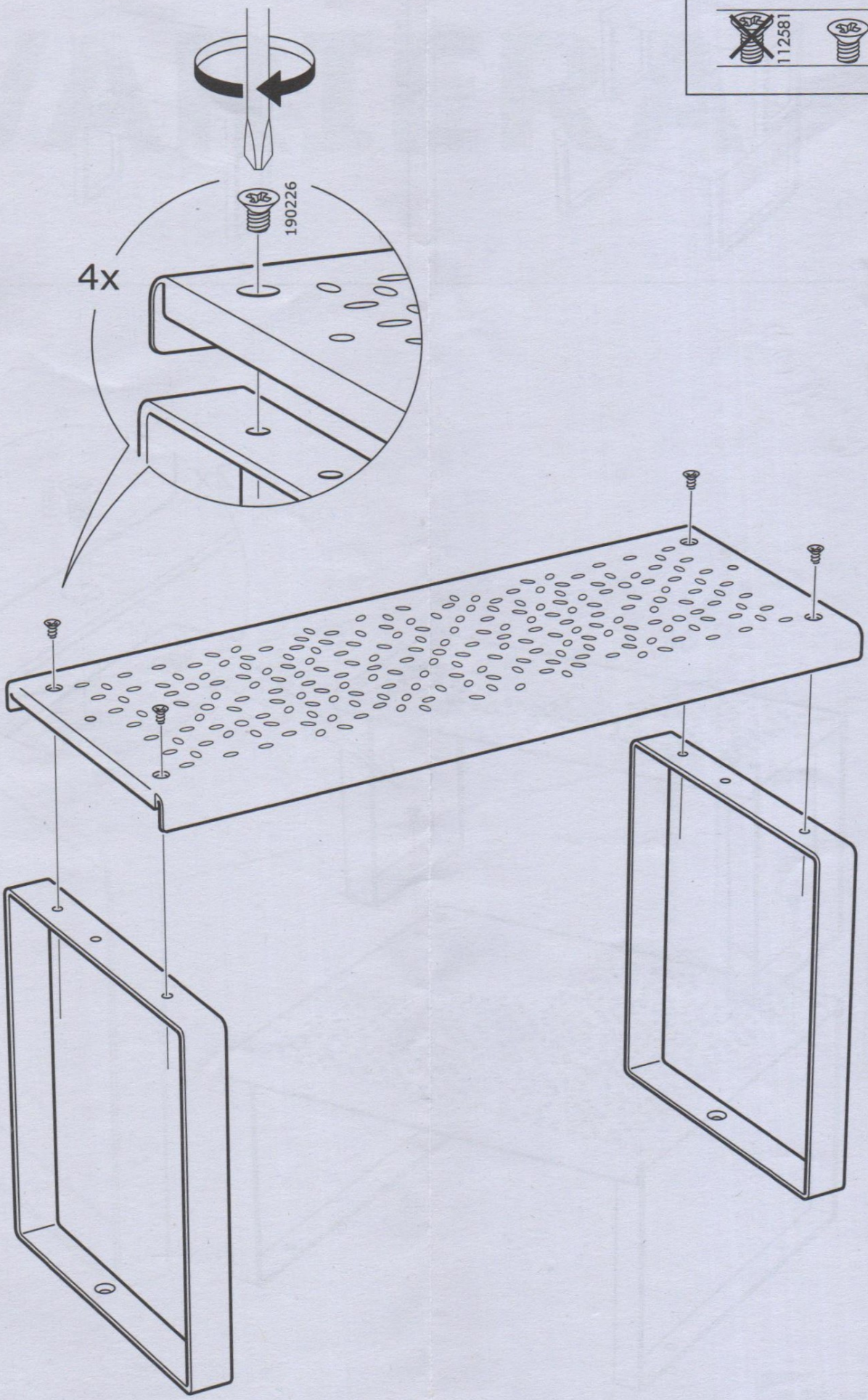

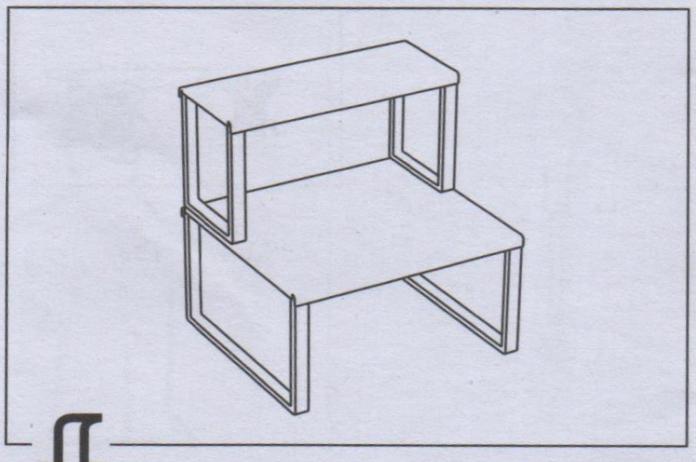

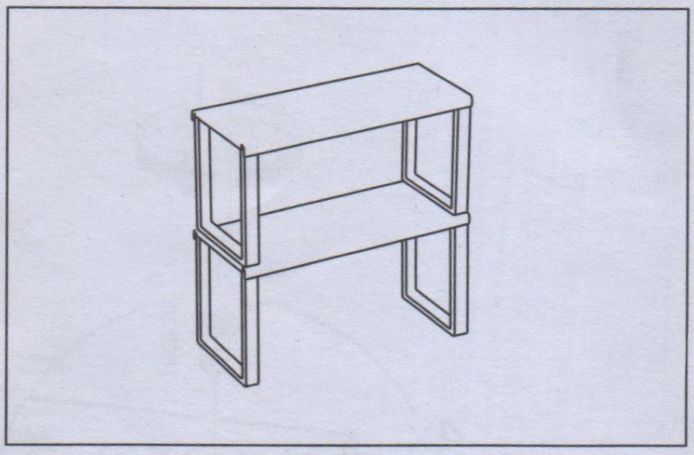

2

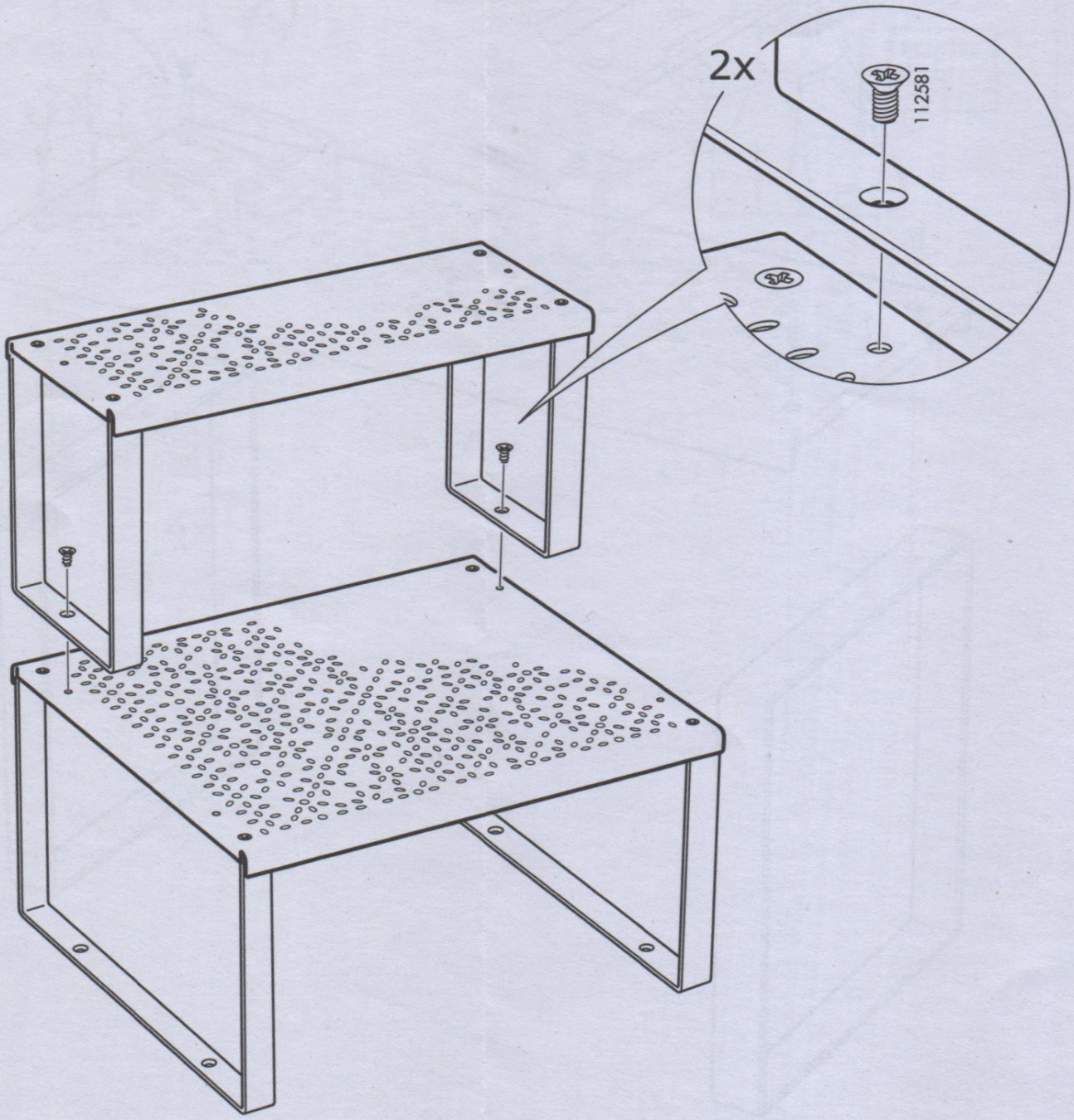

© Inter IKEA Systems B.V. 2012
2017-08-08
20463
AA-741489-2